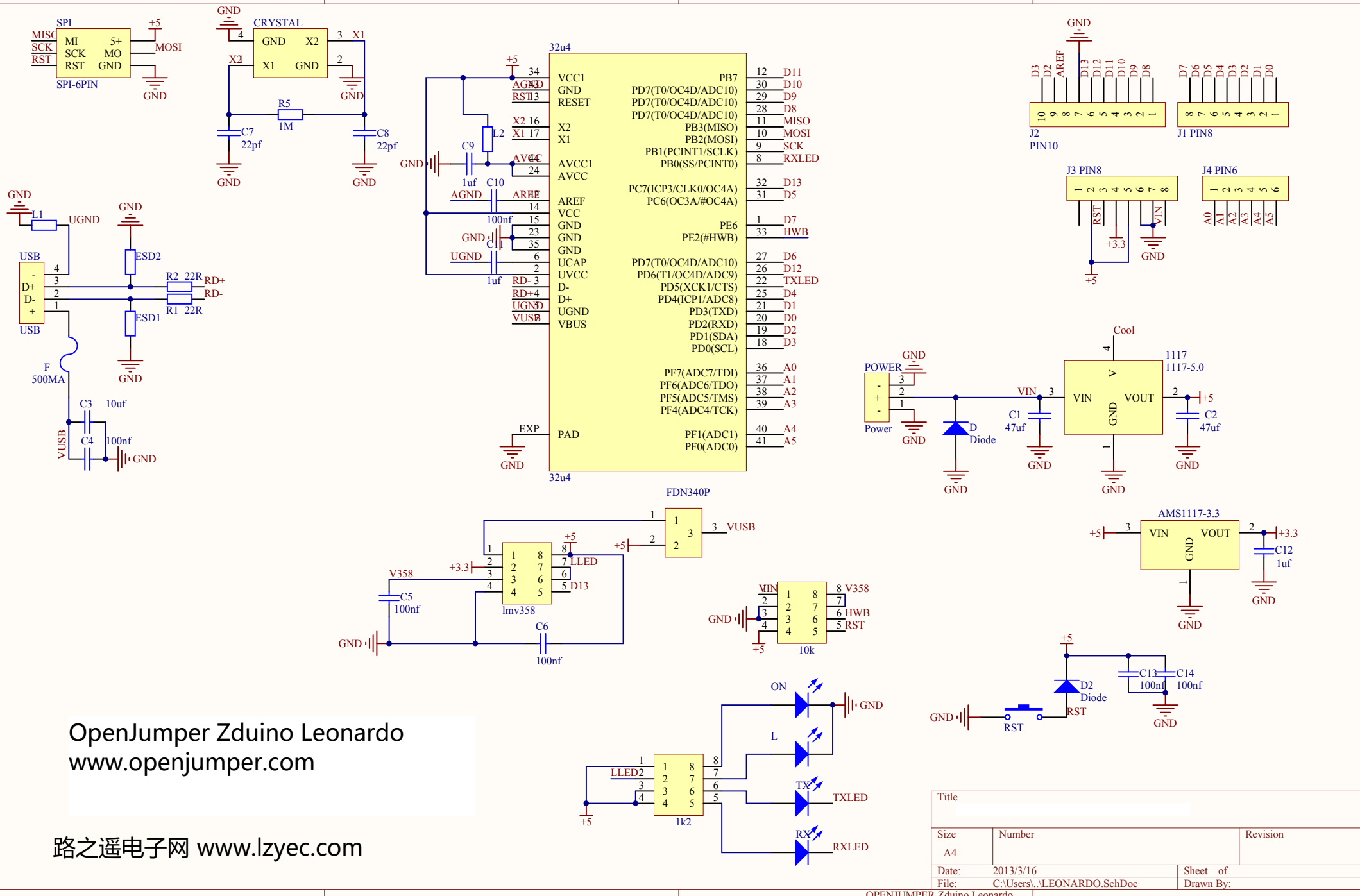
SPI
SPI-6PIN
CRYSTAL
32u4
VCC1
GND
RESET
X2
X1
AVCC1
AVCC
AREF
VCC
GND
GND
GND
UCAP
UVCC
D-
D+
UGND
VBUS
PAD
PB7
PD7(T0/OC4D/ADC10)
PD7(T0/OC4D/ADC10)
PD7(T0/OC4D/ADC10)
PB3(MISO)
PB2(MOSI)
PB1(PCINT1/SCLK)
PB0(SS/PCINT0)
PC7(ICP3/CLK0/OC4A)
PC6(OC3A/#OC4A)
PE6
PE2(#HWB)
PD7(T0/OC4D/ADC10)
PD6(T1/OC4D/ADC9)
PD5(XCK1/CTS)
PD4(ICP1/ADC8)
PD3(TXD)
PD2(RXD)
PD1(SDA)
PD0(SCL)
PF7(ADC7/TDI)
PF6(ADC6/TDO)
PF5(ADC5/TMS)
PF4(ADC4/TCK)
PF1(ADC1)
PF0(ADC0)
EXP
J2
PIN10
J1 PIN8
J3 PIN8
J4 PIN6
USB
F
500MA
POWER
Power
Diode
Cool
1117
1117-5.0
FDN340P
lmv358
V358
10k
AMS1117-3.3
D2
Diode
ON
L
TX
RX
TXLED
RXLED
LLED
1k2
OpenJumper Zduino Leonardo
www.openjumper.com
路之遥电子网 www.lzyec.com
Title
Size
A4
Number
Revision
Date: 2013/3/16
Sheet of
File: C:\Users\..\LEONARDO.SchDoc
Drawn By:
OPENJUMPER Zduino Leonardo